ANALYSIS OF ROBOT LOCALISATION PERFORMANCE BASED ON EXTENDED KALMAN FILTER

FARAH HAZWANI BINTI CHE HASSAN

A project report submitted in partial
fulfillment of the requirement for the award of the
Degree of Master of Electrical Engineering

Faculty of Electrical and Electronic Engineering
Universiti Tun Hussein Onn Malaysia

JANUARY, 2015

ABSTRACT

This thesis presents the Simultaneous Localization and Mapping (SLAM) problem for a mobile robot in an unknown indoor environment. A most current localisation algorithm has less flexibility and autonomy because it depends on human to determine what aspects of the sensor data to use in localisation. To improve the localisation accuracy for a mobile robot, the Extended Kalman Filter (EKF) algorithm is used to achieve the required robustness and accuracy. EKF is a technique from estimation theory that combines the information of different uncertain sources to obtain the value of variables. However, there are a number of variations of EKF with different values of variables, which lead to contradicting results in terms of standard deviations of path (distance) and angle. This project is implemented based on the existing localisation algorithm [30]. There are two types of results that have been analysed in this paper. First is the performance of the algorithm using different parameters in which different velocities and number of landmarks have been used to determine the accuracy of the localisation method. Second is comparing the performance of update approaches of filters namely Kalman Filter Joseph, Kalman Filter Cholesky and Kalman Filter Update in different scenarios. MATLAB coding [30] is used to run the simulation of update approaches of filters. Finding the best variation and a good choice of variables are important factors to have acceptable results consistently.

ABSTRAK

Thesis ini membincangkan masalah Penyetempatan Serentak dan Pemetaan (SLAM) untuk robot mudah alih dalam persekitaran dalaman yang tidak diketahui. Algoritma penyetempatan terkini kurang fleksibiliti dan autonomi kerana ia bergantung kepada manusia untuk menentukan apa aspek data pengesan yang digunakan dalam penyetempatan. Untuk memperbaiki ketepatan penyetempatan untuk robot mudah alih, algoritma Extended Kalman Filter (EKF) digunakan untuk mencapai keteguhan dan ketepatan yang diperlukan. EKF adalah teknik dari teori anggaran yang menggabungkan maklumat daripada sumber-sumber berbeza yang tidak pasti untuk mendapatkan nilai pembolehubah. Walaubagaimanapun, terdapat beberapa variasi EKF yang berbeza nilai pembolehubah yang membawa kepada keputusan yang bercanggah dari segi sisihan piawai jalan (jarak) dan sudut. Projek ini dilaksanakan adalah untuk menyiasat algoritma penyetempatan yang sedia ada [30]. Terdapat dua jenis keputusan yang telah dianalisis dalam kertas kerja ini. Pertama adalah menganalisis prestasi algoritma menggunakan parameter yang berbeza di mana halaju yang berbeza dan beberapa tanda telah digunakan untuk menentukan ketepatan kaedah penyetempatan. Keduanya ialah membandingkan prestasi masa kini pelbagai jenis penapis iaitu Kalman Filter Joseph, Kalman Filter Cholesky dan Kalman Filter Update dalam senario yang berbeza. pengekodan MATLAB [30] digunakan untuk menjalankan simulasi dan menunjukkan prestasi robot. Oleh itu, mencari variasi yang terbaik dan pilihan pembolehubah yang baik adalah faktor penting untuk mencapai keputusan yang lebih konsisten.

TABLE OF CONTENT

LIST OF TABLE

LIST OF FIGURE

LIST OF SYMBOL AND ABBREVIATION

KF	-	Kalman Filter
EKF	-	Extended Kalman Filter
UKF	-	Unsected Kalman Filter
CKF	-	cubature Kalman Filter
GUI	-	Graphical User Interface
GPS	-	Global Positioning System
SD	-	Standard Deviation
Rad	-	Radian
m	-	Metre

CHAPTER 1

INTRODUCTION

1.1 Project Background

Generally, robot is a tool of machine that can ease the human burden and can also be classified as an automatic machine where it has the ability to move in a variety of environments according to a predetermined function. Robot serves to replace humans in order of performing tasks that are repetitive and dangerous due to size limitations, and environments that are inconsistent with human life such as in an aerospace, underwater, in the air, underground, or in a space.

There are various types of robots that have been produced in recent times. Among robots that are commonly used is industrial robot, which serves as a mechanical robot that can be controlled automatically by programming in three or more axes for industrial automation applications. Apart from that, autonomous robot is the one that is widely used because it can perform various functions independently and can navigate freely in space without human assistance. There are some features of autonomous robot to gain information about the environment while can operate for an extended period without human intervention. It can also avoid situations that

are harmful to people, property, or itself unless those are part of its design specifications [1].

Mobile robot must capable of moving in any given environment. Besides that, mobile robot must also have the capability of tracking its paths and trajectories in the workspace [2].

In real world, there are methods for locating mobile robot that consists of relative positioning and absolute positioning. For relative positioning, dead reckoning is typically used to calculate the robot positions from a start reference point to the new updated point. As known that dead reckoning is the easier method that is normally used in real time for estimation of the position of a robot using internal sensors. However in the dead reckoning, the position of the robot could not be estimated accurately because it has an unbounded accumulation of errors. Hence, frequent correction is made from other sensors to overcome this problem based on error happened [3]. For absolute positioning depend on the detecting and recognizing of different features in the robot environment.

In order to estimate the position of the robot accurately, it must be able to localise itself in an environment. A most current localisation algorithm has less flexibility and autonomy because it depends on human to determine what aspects of the sensor data to use in localisation. This problem can be addressed by using Simultaneously Localisation and Mapping (SLAM) technique that can localise the position of the robot using the surrounding landmarks based on the mapping for mobile robot navigation in a cluttered environment. Localisation is very important for autonomous robot to track a path, detect and avoid obstacles properly. The difficulty of the localisation problem depends on the characteristics of the robot environment, the characteristics of the sensors as well as the level of map detail required by the application.

This project studies a navigation algorithm that simultaneously locates of the robots and updates landmarks in a cluttered environment. A key issue being addressed is how to improve the localisation accuracy for mobile robots in a continuous operation in which the Extended Kalman Filter algorithm is adopted to integrate odometry data with sensor to achieve the required robustness and accuracy in the nonlinear dynamical systems. For the sake of simplicity, this project focuses on 2D model and based on the indoor environment to demonstrate the movement of the robot that can localise itself based on the surrounding landmarks.

1.2 Problem Statement

It is impossible to perform robot navigation and route planning unless the position of the robot and its environment is known. Motions sensor that tracks the relative movement of the robot is known to be not reliable and accurate because of the noise due to the sensor. Hence, it is necessary to use an approach to localise the robot based on available landmarks information. There are several methods to estimate the robots position based on range sensors or calculate the robots position at any time that having enough visual landmarks based on geometry information. One of them is simultaneously localisation and mapping (SLAM) that uses Extended Kalman Filter (EKF). EKF is a technique from estimation theory that combines the information of different uncertain sources to obtain the value of variables. However, there are a number of variations of EKF with different values of variables, which lead to contradicting results in terms of standard deviation of path and angle. Thus, finding the best variation and a good choice of variables are important factors to have acceptable results consistently.

1.3 Objective

The main objectives of this project are:

i) To investigate the existing localisation algorithm [30] based on Extended Kalman Filter.
ii) To analyse the performance of the algorithms by using different parameters.
iii) To compare the performance of the algorithms by using several type of update approaches.

1.4 Scope of Project

The scopes of this project are as the following:

i) This project concentrates on robot localisation using surrounding landmarks with Extended Kalman Filter as the estimator.
ii) MATLAB/Simulink is used for modelling the environment and simulation.
iii) It focuses on 2D model and indoor environment.
iv) The project is based on work of T. Bailey [30].

CHAPTER 2

LITERATURE REVIEW

2.1 Introduction

This chapter describes the prediction of location using surrounding landmark. In this study, SLAM technique is used to estimate the robot location. The first part of this chapter describes the use of landmarks to provide more accurate location.

The second part explains the Kalman filter technique which is used in this project. It is the foundation of the SLAM to solve the problem of localisation of a mobile robot based on the surrounding landmarks and reports its location to the base station.

The last part of this chapter is related to technology development based on past studies.

2.2 Landmarks

Landmarks are generally defines as passive objects in the environment that provide a high degree of localisation more accurate that cause by nature or man made use for navigation. Mobile robot that use a landmarks for localisation generally used artificial markers that been use to make localisation easier [4]. Landmarks are distinct features that a robot can recognize from its sensory input. Landmarks can be in geometric shapes which are rectangles, lines and circles and sometimes may include in additional information in form of bar codes. In general, landmarks have a fixed and known position that relative to which a robot can localise itself. Landmarks are carefully chosen to be easy to identify for example there must be sufficient contrast to the background. As usual a robot can use landmarks for navigation in which the characteristics of the landmarks must be known and stored in the robots memory [5].

2.3 Localisation

Robot needs to estimate its location with respects to objects in its environment. Localisation is one of the most active areas in mobile robotics research. The task is to construct simultaneously estimating the robots location from the partial map and noisy odometry measurements [4]. Localisation is very important for autonomous vehicle to track a path, detect and avoid obstacles properly. Indoor robot localisation has been done successfully however for outdoor robot localisation is still a challenging problem because of an environments which is have many obstacles for example the presence of people, cars, and other moving objects. Localisation in a topological map is not about finding the (x,y) position of the robot but rather finding on which node the robot is located. In the topology approaches, the accuracy of the odometry information is often less important. However, odometry is still used to indicate the approximately in which direction the robot is moving.

2.3.1 Types of localisation

There are several types of localisation that normally used for solve robot localisation problem such as dead reckoning, prior map localisation and simultaneously localisation and mapping (SLAM).

2.3.1.1 Dead reckoning

Dead reckoning is the process of determining the one present position and the speed from a known past position which is used to predict a future position and speed from a known present position. The dead reckoning position only produces an approximate position because it does not allow for the effect of current or compass error. Dead reckoning helps in determining sunrise and sunset in predicting landfall, sighting lights and predicting arrival times and in evaluating the accuracy of electronic positioning information, [6]. However, the dead reckoning suffers from an accumulation of errors during the operation [3].

2.3.1.2 Prior Map Localisation

Localisation from sensor measurement is a fundamental task for navigation but in many applications the sensor readings are sometimes unreliable. The relative probabilities of different areas of the map reflect beliefs about both the person and the environment. This can cause no information can be estimated except such as a motion model, probability map, initial position and orientation [7]. Localisation based on a prior map requires the knowledge of the environment defined by the location of different landmarks meanwhile the environment needs to be explored in advance. This may be a problem for an autonomous vehicle that operates within the known environment. If it is necessary to extend the environment of operation the new areas have to be surveyed before the autonomous localisation can take place.

2.3.1.3 Simultaneously Localisation and Mapping (SLAM)

Localisation is the problem of estimating the robot position includes its path given as known map of the environment. Therefore, the mapping is defined as a construction of the map of the environment knowing the true path of the robot. Simultaneously Localisation and Mapping (SLAM) is the process of building a map of an environment while concurrently generating an estimate for the location of the robot. SLAM provides a mobile robot with a fundamental ability to localise itself and the features in the environment without prior map, which is essential for many navigation tasks [8]. The aim of the SLAM is to recover both the robot path and the environment map using only the data gathered by its sensors. These data are typically the robot displacement estimated from the odometry and features extracted from laser, ultrasonic or camera images.

2.3.2 Classification of localisation problems

There are several problems in robot localisation such as position tracking, global localisation and kidnapped robot problem. Below are the descriptions of these problems.

2.3.2.1 Position Tracking

For position tracking the robot current localisation is updated based on the knowledge of its previous position which is tracking. In this cases supposed to be known the robot initial location. The large position tracking fail to localise the robot if the uncertainly of robot pose is too large [9].

2.3.2.2 Global Localisation

For global localisation typically assumes that the robot initial localisation is unknown. It means that the robot can be placed anywhere in the environment without the knowledge about it and is able to localise globally within it [9].

2.3.2.3 Kidnapped robot problem

The kidnapped robot problem tackles the case of the robot gets kidnapped and move to another location. The kidnapped robot problem is similar to the global localisation problem only if the robot localise having been kidnapped. The difficulty arises when the robot does not know that it has been moved to another location and it believes it knows where it is but in fact does not. The ability to recover from kidnapped is necessary condition for the operation of any autonomous robot and even more for commercial robots [9].

2.4 Mapping

Map building is a very important issue for a mobile robot to perform tasks autonomously. It is required for the system to simulate the landmark on true map and each landmark should have a features mark to distinguish landmarks in different positions. These landmarks are used to identify in the movement process of mobile robot. These landmarks are observed in the movement process of mobile robot through which independent map is constructed to mark the positions of these landmarks. The problem of robotic mapping is that of acquiring a space model of a robots environment. Maps are commonly used for robot navigation for example localisation. To acquire a map the robots must have a sensors that normally used to observed. Sensors commonly range finders using sonar, laser and infrared technology, radar, compasses and GPS. However, all these sensors are subject to errors often referred to as measurement noise [10].

2.5 Gaussian Filter

There are several types of Gaussian Filter which is mostly used as an algorithm to solve the problem of robot to find its location based on the surrounding landmarks and reports its location to the base station. The Gaussian filter is non causal which means the filter window is symmetric about the origin in the time domain. This is usually of no consequence for applications where the filter bandwidth is much larger

than the signal. In real time systems a delay is covered because incoming samples need to fill the filter window before the filter can be applied to the signal. The parameter of Gaussian by its mean and covariance is called the moments parameterization because of the mean and covariance are the first and second moments of a probability distribution in which all other moments are zero for normal distributions [11].

2.5.1 Types of Gaussian filter

There are several types of Gaussian Filter that will be discussed in this sub-section including Kalman Filter, Extended Kalman Filter, Unscented Kalman Filter and Cubature Kalman Filter.

2.5.1.1 Kalman Filter

In engineering, filtering is the most important method to reduce the noise from signals. The noisy measurement normally used to estimate a noisy dynamic system based on Kalman Filter technique. Kalman Filter assumes that the action and sensor models are subject to Gaussian noise and assume that the belief can be represented by one Gaussian function. In practice, this might not always be the case but it does allow the Kalman Filter to efficiently make its calculations.

The time or measurement form of the Kalman Filter is expressed in two steps in which the time update of the state variable vector estimate in time that received into the input of the system and created a prediction of the new state. The measurement update adjusts the time update state estimate to take into account measurements that made during the time interval [5].

Kalman Filter is based on linear dynamical systems discredited in the time domain. They are modelled on a Markov chain built on linear operator's permutated by Gaussian noise. They state of the system is represented by a vector of real numbers. At each discrete time increment, a linear operator is applied to the state to generate the new state with some noise mixed in and optionally some information from the controls on the system if they are known. Then, another linear operator is

mixed with more noise, generates the visible outputs from the hidden state. The Kalman Filter may be regarded as analogous to the hidden Markov model with the key difference that the hidden state variables are continuous [11]. In order to use the Kalman Filter to estimate the internal state of a process given only a sequence of noise observation one must model the process in accordance with the framework of the Kalman Filter. Fig 2.1 shows model underlying the Kalman Filter [12].

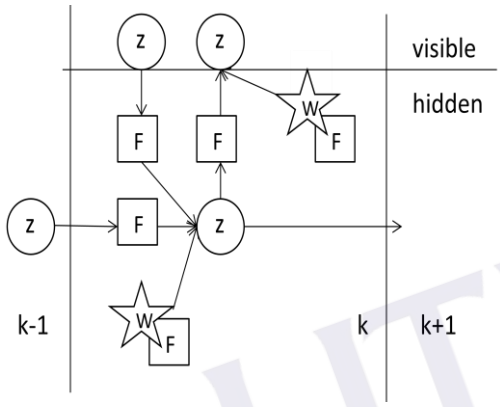

Figure 2.1: Model underlying the Kalman Filter [12]

The Kalman Filter model assumes the true state at time k is evolved from the state at (k-1) according to [12]

$$X_k = F_k X_{k-1} + B_k U_k + W_k \tag{2.1}$$

F_k is the state transition model which is applied to the previous state X_{k-1}

B_k is the control input model which is applied to the control vector U_k

W_k is the process noise which is assumed to be drawn from a zero mean multivariate normal distribution with covariance $Q_k W_k \sim N(0, Q_k)$

at time k an observation (or measurement) Z_k of the true state X_k is made according to

$$Z_k = H_k X_k + V_k \tag{2.2}$$

where H_k is the observation model which maps the true state space into the observed space and V_k is the observation noise which is assumed to be zero mean Gaussian white noise with covariance R_k

$$V_k \sim N(0, R_k) \tag{2.3}$$

the initial state and the noise vectors at each step $\{X_0, W_1 \ldots\ldots W_k V_1 \ldots\ldots V)$ are all assumed to be mutually independent. Many real dynamical systems do not exactly fit the model. However, because the Kalman Filter is designed to operate in the presence of noise, an approximate fit is often good enough for the filter to be very useful.

2.5.1.2 Extended Kalman Filter

Unlike Kalman Filter, Extended Kalman Filter (EKF) deals with nonlinear process model and nonlinear observation model which is linear about an estimate of the current mean and covariance as shown in Fig. 2.2. System with nonlinear output maps is treated and the condition needs to ensure the uniform roundedness of the error covariance is related to the observation properties of the underlying nonlinear system. Furthermore, the uniform asymptotic convergence of the observation error is established whenever the nonlinear system satisfies an observation rank condition and the states stay within a convex compact domain.

A mobile robot is driven by a set of external inputs or controls and its outputs are evaluated by measuring devices or sensors. The observations convey the errors and uncertainties in the process, which is from the sensor noise and the system errors such as the environment. Based on the available information (control inputs and observations) it is required to obtain an estimate of the system state that optimizes a given criteria [13].

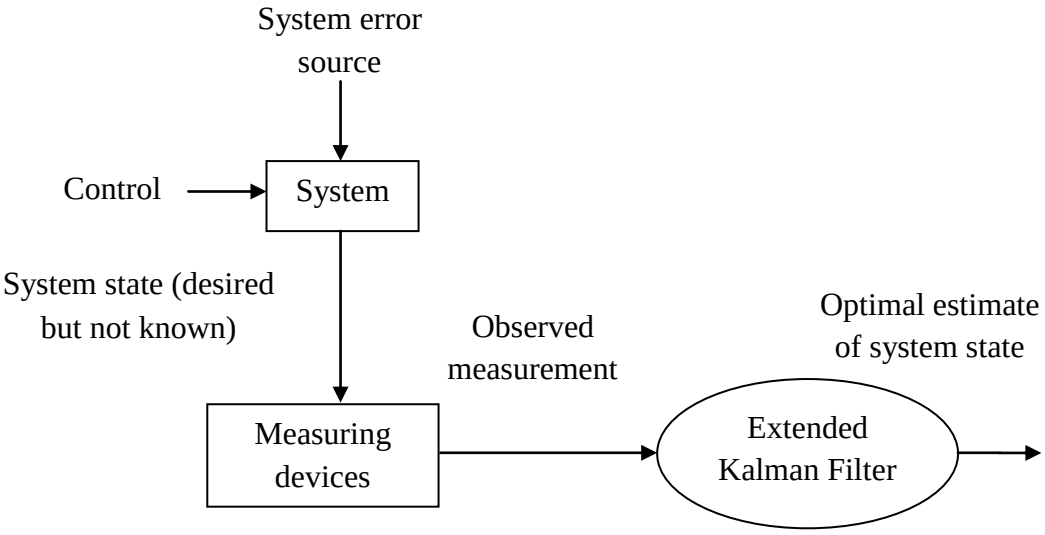

Figure 2.2: Typical application of Extended Kalman Filter

EKF is widely used to estimate current state depends on the discrete time and measurement. At each discrete time step to generate a new state, a nonlinear operator is applied in order to integrate the information from control system and noise. Hence, noise is generated from the hidden, true or state on the Fig. 2.3 according to [11] for the time step k-1, k and k+1. The ellipse represents the multivariate normal distribution for the mean and covariance matrices, the squares represent of the matrices used while for the values represent the vector. The 'Observed' represents the measurement of the current state. The 'Supplied by user' represents process model and 'hidden' represents an actual state of system that is to be estimated by the EKF.

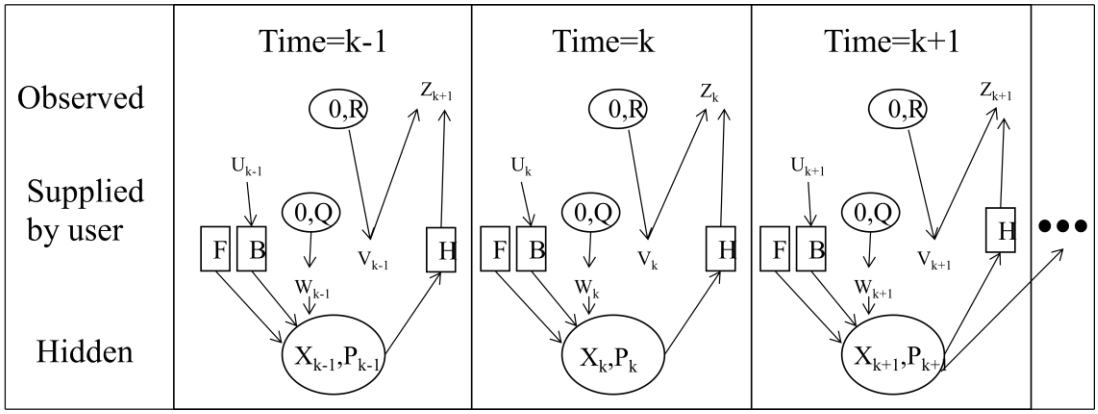

Figure 2.3: Underlying model of Extended Kalman Filter [11]

The nonlinear process model (from time k to time k + 1) is described as [14]

$$X_{k+1} = f(X_k, U_k) + W_k \tag{2.4}$$

X_k, X_{k+1} is the system state (vector) at the time k, k + 1

f is the system transition function

U_k is the control

W_k is the zero mean Gaussian process noise $W_k \sim N(0, Q)$

For state estimate problem, the true system state is not available and needs to be estimated. The initial state X_0 is assumed to follow a known Gussian Distribution $X_0 \sim N(X_0, P_0)$ to estimate the state at each time step by the process model and the observation. The observation model at time k + 1 is given by

$$Z_{k+1} = h(X_{k+1}) + V_{k+1} \tag{2.5}$$

where h is the observation function

V_{k+1} is the zero mean Gaussian observation noise $V_{k+1} \sim N(0, R)$

suppose the knowledge on X_k at the time k is

$$X_k \sim N(X_k, P_k) \tag{2.6}$$

then X_{k+1} at time k + 1 follows

$$X_{k+1} \sim N(X_{k+1}, P_{k+1}) \tag{2.7}$$

where (X_{k+1}, P_{k+1}) can be computed by the following EKF formula. The predict using process model

$$X_{k+1} \sim N(X_{k+1}, P_{k+1}) \tag{2.8}$$

$$P_{k+1} = \nabla f_x P_k \nabla f_x^T + Q \tag{2.9}$$

where ∇f_x is the Jacobian of function f with respect to x evaluated at X_k

The function *f* can be used to compute the predicted state from the previous estimate and similarly the function h can be used to compute the predicted measurement from the predicted state. However, f and h cannot be applied to the covariance directly. Instead a matrix of partial derivatives which is Jacobian is computed.

2.5.1.3 Unscented Kalman Filter

Unscented Kalman Filter (UKF) is an improvement of the nonlinear EKF. In the UKF, the probability density is approximated by a deterministic sampling of points which represent the underlying distribution as a Gaussian. The nonlinear transformation of these points is intended to be an estimation of the posterior distribution, which can then be derived from the transformed samples. The unscented transformation is a method for calculating the statistics of a random variable which undergoes a nonlinear transformation. The UKF tends to be more robust and more accurate than the EKF in its estimation of error. Consider the following nonlinear system described by the deference equation and the observation model with additive noise [15]

$$X_k = f(X_{k-1}) + W_{k-1} \tag{2.10}$$

$$Z_k = h(X_k) + V_k \tag{2.11}$$

the initial state X_0 is a random vector with known mean μo=E[xo] and covariance $P_0 =$ E[(xo- μo)$(xo - \mu o)^T$]. in this case of non additive process and measurement noise, the unscented transformation scheme is applied to the augmented state.

$$X_k^{aug} = [X_k^T \; W_{k-1}^T \; V_k^T]^T \tag{2.12}$$

By consider propagating a random variable x (dimension of L) through a nonlinear function is y = g(x). It can be assumed x has meant of x and covariance is P_x. To

calculate statistic of y, by form a matrix x of 2L + 1 sigma vectors X_i (with corresponding weight W_i) then can be shown as

$$x_o = x \tag{2.13}$$

$$x_o = x + (\sqrt{(L+\lambda)P_x})\text{i} \tag{2.14}$$

$$x_o = x - (\sqrt{(L+\lambda)P_x})\ \text{i-L} \tag{2.15}$$

$$Wo^m = \lambda/(L+\lambda) \tag{2.16}$$

$$Wo^m = \lambda/(L+\lambda) + (1-\alpha^2+\beta) \tag{2.17}$$

λ = $\alpha^2(L+k) - L$ is a scaling parameter which is set a small value

α is spread of the sigma points around

k is secondary scaling parameter which is usually set to 0

β is to incorporate prior knowledge of distribution of x

2.5.1.4 Cubature Kalman Filter

Cubature Kalman Filters (CKFs) is used for the nonlinear dynamic systems with additive process and measurement noise. As is well known, the heart of the Cubature Kalman Filters (CKF) is the third degree spherical radial cubature rule which makes it possible to compute the integrals encountered in nonlinear filtering problems. However, the rule not only requires computing the integration over an n-dimensional spherical region, but also combines the spherical cubature rule with the radial rule, thereby making it difficult to construct higher degree Cubature Kalman Filters (CKFs). Moreover, the cubature formula used to construct the Cubature Kalman Filters (CKF) has some drawbacks in computation. Consider the nonlinear filtering problems with additive process and measurement noise, whose state-space model can be expressed by the pair of difference equations in discrete time [16]

$$x_k = f(x_{k-1}, u_{k-1}) + v_{k-1} \tag{2.18}$$

$$z_k = h(x_k, u_k) + w_k \tag{2.19}$$

Equations (2.18) and (2.19) are the process equation and the measurement equation respectively in which

$x_k \in R^{n_\infty}$ is the state at time k

$u_k \in R^{n_u}$ is the control input

f and h are some nonlinear functions $z_k \in R^{n_z}$ is the measurement

v_{k-1} and w_k are white noise with zero mean and covariance and Q_{k-1} and R_k, respectively.

Under the Gaussian assumption in the Bayesian filtering framework, the core issue of nonlinear filtering problems is to compute the multi-dimensional weighted integrals whose integrands are all in the form of nonlinear function × Gaussian density, viz.

$$I(f) = \int_{\Omega}^{1} f(x)w(x)dx \tag{2.20}$$

where w(x) = exp($-x^{Tx}$) is the weighting function and Ω Rn is the region of integration.

Table 2.1 shows the comparison of Gaussian filter that can be used as a reference to be adopted in the project. Therefore to get a more accurate position of the robot, it is important to determine the suitable filter as a technique that can be implemented because of each type of filter has certain features which are have advantages and disadvantages.

Table 2.1: Comparison of Gaussian Filter

No	Type of Filter	Description
1	Kalman Filter	• Use in linear dynamic system with white Gaussian noise. • Generates estimates of the conditional mean and conditional covariance. • Smoothing noisy data and providing estimates of parameters of interest. • Can be expensive with large number of state variables.
2	Extended Kalman Filter	• Use in nonlinear dynamic system. • Generates estimate of the current mean and covariance. • It works by transforming the nonlinear models at each time step into linearly systems of equations.
3	Unscented Kalman Filter	• Improvement of a nonlinear Extended Kalman Filter. • The probability density is approximated by a deterministic sampling of points which represent the underlying distribution as a Gaussian. • These sample points completely capture true mean and covariance of the Gaussian Random Variable (GRV).

4	Cubature Kalman Filter	• Used for the nonlinear dynamic systems with additive process and measurement noise. • Gaussian approximation of Bayesian Filter, but provides a more accurate filtering than existing Gaussian filters.

2.6 Technology Development

Based on previous studies, [17] can be used to propose a navigation algorithm that simultaneously locates the robots and updates landmarks in a manufacturing environment that can be used on mobile robots industry. In addition, the Kalman filter technique is used to construct the robot localisation problem [18]. Therefore, the techniques used to reduce the problem of robot locations and also contribute to technology development especially in the industry of mobile robots.

2.6.1 Landmark based Navigation of Industrial Mobile Robots

Huosheng and Dongbing [17] proposed a navigation algorithm that simultaneously located the robots and updated landmarks in a manufacturing environment. In this project, Kohonen Neural Networks were used to identify the landmarks being detected and achieved correct match between sensor data and the real world and normally used in triangular algorithm. The disadvantage of using Kohonen Neural Networks is the difficulty to determine the correspondence between the measured angle and the landmark which is not convenient for real world applications. Fig. 2.4 shows the landmarks and an on board laser scanner.

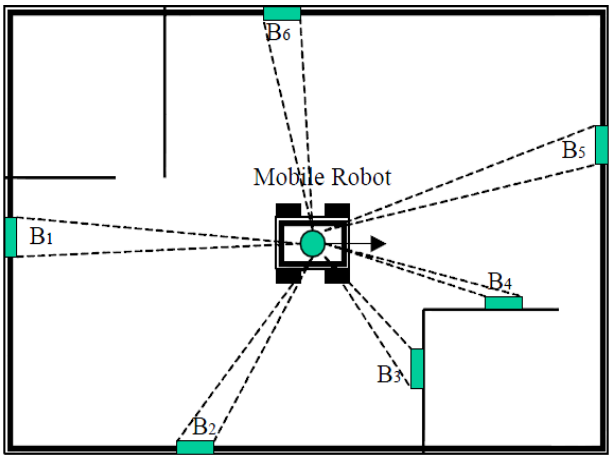

Figure 2.4: Landmarks and an on board laser scanner [17]

2.6.2 Robot Localisation and Kalman Filters

Rudy [18] did a project named Robot localisation and Kalman Filters. This project showed how to construct the robot localisation problem by using Kalman filter technique. Hence, the basic concepts involved in Kalman Filters and derive the equations of the basic filter that commonly used extensions. Other than that the types of filter that normally used were compared to show the difference between them. The disadvantage of this project is it is difficult to make the KF applicable in dynamic environments since the real world is not static. Figs. 2.5 and 2.6 show robot position and measurement model.

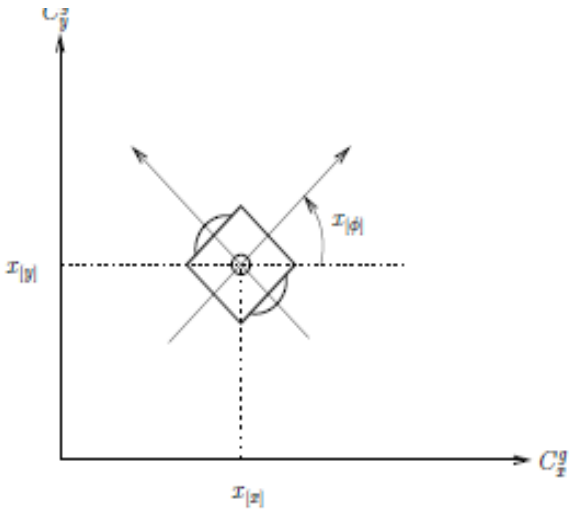

Figure 2.5: Robot position [18]

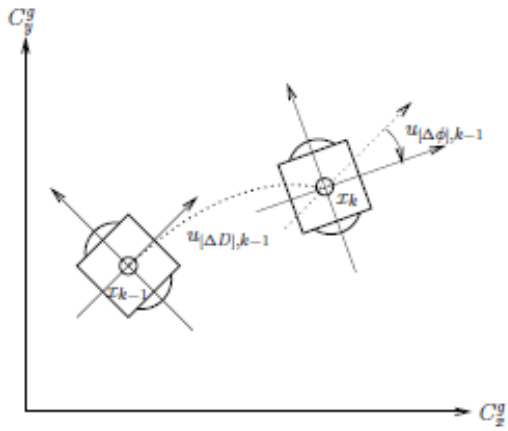

Figure 2.6: Measurement model [18]

2.6.3 Convergence and Consistency Analysis for Extended Kalman Filter Based SLAM

Shoundong and Gamini [19] investigated the convergence properties and consistency Extended Kalman Filter based simultaneous localization and mapping (SLAM) algorithms. Proofs of convergence were provided for the nonlinear two-dimensional SLAM problem with point landmarks observed using a range and bearing sensor. It was shown that the robot orientation uncertainty at the instant when landmarks were first observed had a significant effect on the limit and/or the lower bound of the uncertainties of the landmark position estimates. This research also provided some insights to the inconsistencies of EKF based SLAM that had been recently observed. There are several problem while used this method because of the convergence can be applied only in the linear while EKF usually use in nonlinear system. Furthermore the observation using the range only or bearing only for the sensor the linearization error will be much larger and the resulting inconsistencies are expected to be more significant. Fig. 2.7 shows robot movement.

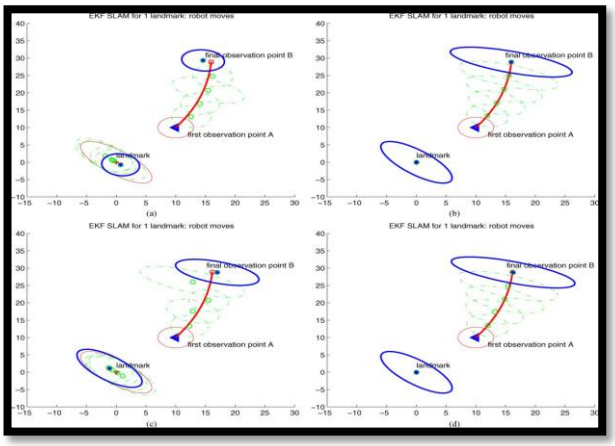

Figure 2.7: Robot movement [19]

2.6.4 LRF based Self Localization of Mobile Robot Using Extended Kalman Filter

A project called LRF based Self Localization of Mobile Robot using Extended Kalman Filter was designed by Songmin et. al. [20]. This paper presented a method of map building using interactive GUI for a mobile robot. The advantage of using this interactive GUI was the operator can modify map built by sensors, compared with the real time video from web camera. The disadvantage of this approach was there had several parts of errors for the line by using odometry data because of the surface roughness due to fails to get an accurately positioning. Fig. 2.8 shows robot movement.

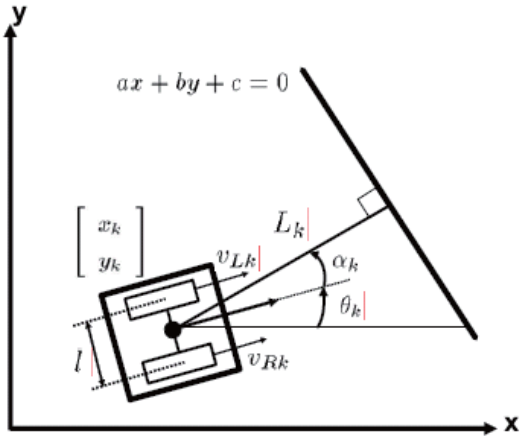

Figure 2.8: Model of mobile robot platform [20]

2.6.5 Navigation of an autonomous mobile robot using EKF SLAM and Fast SLAM

[21] used EKF SLAM and Fast SLAM to introduce a probabilistic approach to a SLAM problem under Gaussian and non Gaussian conditions. They presented the navigation of an autonomous robot using Simultaneous Localization and Mapping (SLAM) in outdoor environments. Fast SLAM is an algorithm that used Rao-Blackwellised method for particle filtering, estimated the path of robot while the landmarks positions which were mutually independent and with no correlation, can be estimated by EKF. Hence, a real outdoor autonomous robot was presented and several experiments had been performed based on both methods. The disadvantages were no correlation between any pairs of landmarks in the map, while landmarks in this network were mutually independent. Figs. 2.9 and 2.10 show vehicle coordinate system and estimation of the trajectory using EKF with Gaussian implication.

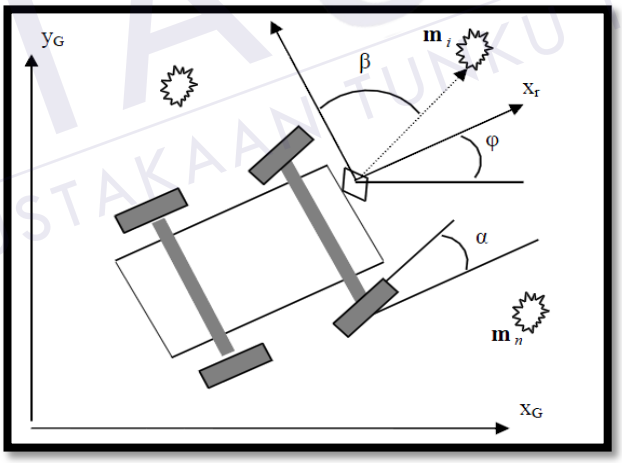

Figure 2.9: Vehicle coordinate system [21]

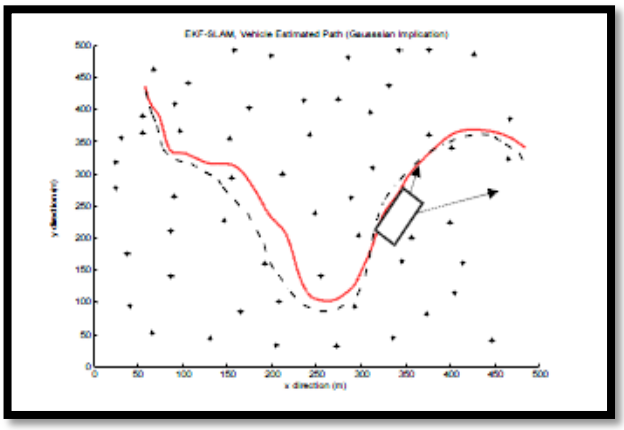

Figure 2.10: Estimation of the trajectory using EKF with Gaussian Implication [21]

2.6.6 Mobile Robot Position Estimation Using Kalman Filter

Caius et. al [22] executed a project called Mobile Robot Position Estimation using Kalman Filter. This project presented the position estimation with the help of the Kalman Filter (KF) and the Extended Kalman Filter (EKF) for an autonomous mobile robot based on Ackermann steering. It focused on 2D model which was easier to implement while measurement by using overhead camera. The advantage of the proposed approach is two different method of filter that can be compared of the localisation accuracy between these two methods. The disadvantage of the approach is the position of robot is in unknown location that is difficult to know accurately the position of the robot. Figs. 2.11 and 2.12 show the trajectory estimation with the Kalman Filter and trajectory estimation with the Extended Kalman Filter.

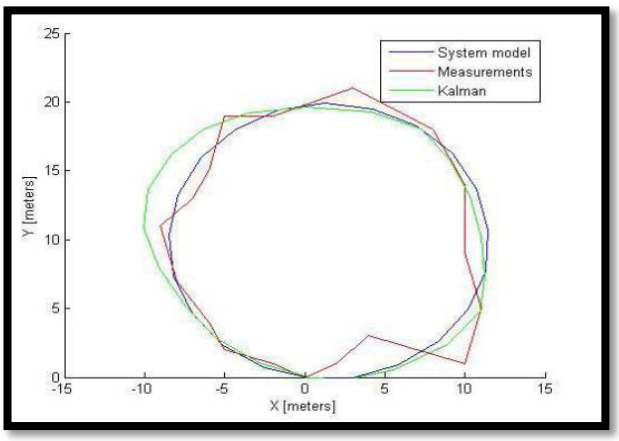

Figure 2.11: Trajectory estimation with the Kalman Filter [22]

REFERENCES

1. Rui, L., Maohai, L. & Lining, S. (2013). Image Features based Robot SLAM. *Robotics and Biomimetics (ROBIO), IEEE International Conference*, pp. 2499 – 2504.
2. Siegwart, R., Nourbakshsh & Scaramuzza, D. (2004). Introduction to Autonomous Mobile Robot. *Journal of Intelligent Robotic and Autonomous Agents*, pp. 70-75.
3. Barrera, A. (2010). Mobile Robot Navigation. *Journal of IEEE Transactions on Robotics and Automation*, pp. 156-160.
4. Cheng, C. L. & Tummala, R. L. (1997). Mobile Robot Navigation using Artificial Landmarks. *Journal of Robotic Systems, 14(2)*, pp. 93–106.
5. Sebastian, T., Wolfram B. & Dieter F. (2005). Probabilistic Robotic. The MIT Press, pp. 365-387
6. Qingquan, L., Zhixiang, F. & Hanwu, Li. (2004). The Application of Integrated GPS and Dead Reckoning Positioning in Automotive Intelligent Navigation System. *Journal of Global Positioning Systems, 3(1-2)*, pp. 183-190.
7. Parsley. (2006). Simultaneous Localisation and Mapping with Prior Information. *Journal of Field Robotics, 31(3)*, pp. 212-235.
8. Zhang, W., Shoudong, H. & Gamini, D. (2007). Simultaneously Localization and Mapping. *Journal of Intelligent Robotic and Autonomous Agents, 3*, pp. 1254- 1301.
9. Tsourdos, I., Silson, A., White, P. & Brian. (2004). Sensor based Robot Localisation and Navigation Using Interval Analysis and Extended Kalman Filter. *Control Conference, 2004. 5th Asian 2004, IEEE International Symposium*, *2*, pp. 1086 – 1093.

10. Se, Lowe, S. & Little, D. (2001). Vision Based Mobile Robot Localization And Mapping Using Scale-Invariant Features. *Robotics and Automation, 2001. Proceedings 2001 ICRA. IEEE International Conference on 2001, 2*, 2051 – 2058.

11. Rao, An., H. W., Hu, Z. C., Mullane. & Joseph, A. (2013). Gaussian Particle Filter based Factorised Solution to the Simultaneous Localization and Mapping problem. *Advanced Robotics and its Social Impacts (ARSO), IEEE Workshop*, pp. 113 – 118.

12. Dick, S. (2009). Kalman filtering with state constraints A Survey of Linear and Nonlinear Algorithms. *Published in IET Control Theory and Applications, January 2009*, pp. 1321-1342.

13. Abhishek, S. & Vishwanath, S. (2013). Localization of a Mobile Autonomous Robot using Extended Kalman Filter. *Advances in Computing and Communications Third International Conference*, pp. 274 – 277.

14. Immanuel, A., Antonios, Peter, S. & Brian, W. (2004). Sensor Based Robot Localisation and Navigation using Interval Analysis and Extended Kalman Filter. *5th Asian Control Conference*, pp. 2637-2643.

15. Liu, C. (2003). Unscented extended Kalman filter for target tracking Systems Engineering and Electronics. *Journal* of *International Journal of Industry Robot*, *22*, pp. 188 – 192.

16. Jing, M., Yuan & Lee, C. (2011). Iterated Cubature Kalman Filter and its Application. *Proceedings of the 2011, IEEE International Conference on Cyber Technology in Automation, Control, and Intelligent Systems*, pp. 3212-3234.

17. Huosheng, H. & Dongbing, G. (2000). Landmark based Navigation of ` Industrial Mobile Robots. *Emerging Technologies and Factory Automation, 1999. Proceedings. ETFA 99. 1999 7th IEEE International Conference, 1,* pp. 121 – 128.

18. Rudy, N. (2003). Robot Localisation and Kalman Filters *IEEE International Conference on 2000*, pp. 1342-1365.

19. Shoundong, H. & Gamini, D. (2000). Convergence and Consistency Analysis for Extended Kalman Filter Based SLAM. *Robotics IEEE Transactions, 23(5)*, pp. 1036 – 1049.

20. Songmin, J., Yasuda, A., Chugo. & Takase, D. (2008). LRF based Self Localization of Mobile Robot Using Extended Kalman Filter. K. *SICE Annual Conference*, pp.2295 - 2298.

21. Sasiadek, J. Z., Monjazeb, A. & Necsulescu, D. (2004). Navigation of an Autonomous Mobile Robot using EKF SLAM and Fast SLAM. *Control Conference, 2004. 5th Asian, IEEE International Symposium*, pp. 72-77.

22. Caius, S., Cristina, Cruceru. & Florin. (1993). Mobile Robot Position Estimation using Kalman Filter. *Robotics and Automation, 1993. Proceedings., 1993 IEEE International Conference*, pp. 373-379.

23. Pakki, K. B. C. , Gu, D.W. & Postlethwaith, I. (2010). SLAM using EKF, EH∞ and Mixed EH_2/ H∞ Filter. *Intelligent Control (ISIC), IEEE International Symposium*, pp. 3212-3243.

24. Pakki, K. B. C. , Gu, D.W. & Postlethwaith, I. (2011). Cubature Kalman Filter based Localization and Mapping. *Robotics and Automation (ICRA), IEEE International Conference*, pp. 3063-3068.

25. Gamini, D., Paul, N., Steven, C. & Huge, F. D. W. (2011). A Solution to the Simultaneous Localization and Map (SLAM) Problem. *IEEE Transactions on Robotics and Automation*,17(3), pp. 229-234.

26. Luigi, D. A., Andrea, G., Pietro, M. & Paolo, P. (2013). A Slam Algorithm for Indoor Mobile Robot Localisation Using an Extended Kalman Filter and a Segment Based Environment Mapping. *Advanced Robotics (ICAR), 2013 16th International Conference*, pp. 1920-1923.

27. Abhishek, S. & Vishwanath. (2013). Localisation of a Mobile Autonomous Robot using Extended Kalman Filter. *Advances in Computing and Communications (ICACC), 2013 Third International Conference*, pp. 274 – 277.

28. Zhang, Q., Pei, H. & Zhang Cheng. (2014). A Mobile Robot Localisation and Map Building Algorithm and Simulation. *Control Conference (CCC), 33rd Chinese 2014*, pp. 3339 – 3344.

29. Jon, B. & Anders, K. (2010). Simultaneous Localization and Mapping of Indoor Environment using a Stereo Camera and Laser Sensor, *3*, pp. 1254-1335.

30. Hart, D. W. & Tim, B. Simultaneous Localization and Mapping. *IEEE Robotic and Automation Magazine 2006*. pp. 1124-1432.