SIMULATION OF DYNAMIC LOAD EFFECT ON POWER SYSTEM FREQUENCY

ABDUL RAHMAN BIN AZIZAN

This report is submitted in partial fulfillment of the requirment for the award of the Master of Electrical Engineering with Honours

PTTA UTHM
PERPUSTAKAAN TUNKU TUN AMINAH

Fakulti Kejuruteraan Elektrik dan Elektronik
Universiti Tun Hussein Onn Malaysia

FEBRUARY 2013

To my beloved parent, brothers and sister

PTTA UTHM
PERPUSTAKAAN TUNKU TUN AMINAH

ACKNOWLEDGEMENT

I would like to thank my supervisor, Dr. Dur Muhammad Soomro, for his guidance and encouragement throughout this report.

Everyone at the Department of Electrical and Electronic Engineering are warmly acknowledged for creating a most friendly atmosphere.

I want to express my love and gratitude to my family who supported and encouraged me to persevere despite many difficulties, for their understanding and endless love, through the duration of my studies. Finally, special thanks also to my graduate friends and lecturers for sharing the literature and invaluable assistance.

PTTA UTHM
PERPUSTAKAAN TUNKU TUN AMINAH

ABSTRACT

This thesis addresses the impact of dynamic load on power system frequency. Rapid dynamic load variations will bring significant impact to the power system in terms of frequency. The thesis is based on three-phase dynamic load (composite based). The objective of this thesis was to analyse the dynamic characteristics of loads and its impact on power system frequency. For this, IEEE 9 bus system was tested with dynamic loads by observing change in power system frequency.

PTTA UTHM
PERPUSTAKAAN TUNKU TUN AMINAH

ABSTRAK

Tesis Ini menangani kesan beban dinamik pada frekuensi sistem kuasa. Perubahan beban dinamik akan membawa kesan yang ketara kepada sistem kuasa dari segi frekuensi. Tesis adalah berdasarkan tiga fasa beban dinamik (berasaskan komposit). Objektif tesis ini adalah untuk menganalisis ciri-ciri dinamik beban dan kesannya kepada frekuensi sistem kuasa. Untuk ini, IEEE 9 jalur sistem telah diuji dengan beban dinamik dengan memerhatikan perubahan dalam frekuensi sistem kuasa.

PTTA UTHM
PERPUSTAKAAN TUNKU TUN AMINAH

TABLE OF CONTENTS

	PAGE
DECLARATION	**ii**
DEDICATION	**iii**
ACKNOWLEDGEMENT	**iv**
ABSTRACT	**v**
ABSTRAK	**vi**
TABLE OF CONTENT	**vii**
LIST OF FIGURE	**x**
LIST OFTABLE	**xii**

CHAPTER 1 INTRODUCTION

1.1	Background	1
1.2	Problem Statement	2
1.3	Objectives	2
1.4	Scope of Study	2
1.5	Expected Result	3

PTTA UTHM PERPUSTAKAAN TUNKU TUN AMINAH

CHAPTER 2 LITERATURE REVIEW

2.1 Introduction 4
2.2 Stability of power system 5
2.3 Basic load concept in term of frequency dependent model 5
2.4 Frequency variations 7
2.5 Review preview case 8
2.6 Load modeling 12
2.7 Power electronic loads 16

CHAPTER 3 METHODOLOGY

3.1 Introduction 18
3.2 Modeling the three phase dynamic load 20
3.2.1 Load selection 21
3.3 Initial simulation and result 22
3.4 Test case IEEE 9 bus test system 24

CHAPTER 4 RESULT AND ANALYSIS

4.1 Introduction 27
4.2 Result and analysis of dynamic load 27

CHAPTER 5 CONCLUSION

5.1 Conclusion 35
5.2 Recommendations 36

PTTA UTHM PERPUSTAKAAN TUNKU TUN AMINAH

REFERENCES 37

APPENDIX 41

PTTA UTHM
PERPUSTAKAAN TUNKU TUN AMINAH

LIST OF FIGURE

		PAGE
2.1	Frequency records Sept.9 2003	7
2.2	Eastern interconnection frequency (Feb 1, 2011)	8
2.3	Eastern Interconnection Frequency Response during LaSalle Unit 1 Trip on (Feb 1, 2011)	9
2.4	Rapid frequency instability.	10
2.5	The model of the IEEE 9 bust test system	11
2.6	Block diagram of the dynamic load model	15
2.7	Model of power system without control	15
2.8	Power electronic frequency dependent load	17
3.1	Methodology flow chart	19
3.2	Diagram indicating the mixture of static and dynamic loads used for stability studies.	20
3.3	Dynamic load modeling	22
3.4	Model of load (dynamic) and frequency dependent	23
3.5	Frequency variation	23
3.6	IEEE 9 bus test system	24
3.7	Frequency variations IEEE bus test system	25
3.8	Model of time constant (T_{p2})	26
4.1	Active power = 46625000 Watt , T_{p1}= 0 , T_{p2}= 0	29
4.2	Active power = 46625000 Watt , T_{p1}= 0 , T_{p2}= 0.1	29
4.3	Active power = 46625000 Watt , T_{p1}= 0 , T_{p2}= 0.2	30
4.4	Active power = 46625000 Watt , T_{p1}= 0 , T_{p2}= 0.3	30
4.5	Active power = 46625000 Watt , T_{p1}= 0 , T_{p2}= 0.4	31
4.6	Active power = 46625000 Watt , T_{p1}= 0 , T_{p2}= 0.5	31
4.7	Active power = 46625000 Watt , T_{p1}= 0 , T_{p2}= 0.6	32
4.8	Active power = 46625000 Watt , T_{p1}= 0 , T_{p2}= 0.7	32

PTTA UTHM PERPUSTAKAAN TUNKU TUN AMINAH

4.9	Active power = 46625000 Watt , T_{p1}= 0 , T_{p2}= 0.8	33
4.10	Active power = 46625000 Watt , T_{p1}= 0 , T_{p2}= 0.9	33
4.11	Overall frequency comparison	35

PTTA UTHM
PERPUSTAKAAN TUNKU TUN AMINAH

LIST OF TABLE

		PAGE
3.1	Input load	21
4.1	Power supply and load specifications	28
4.2	Parameter variations	28

PTTA UTHM
PERPUSTAKAAN TUNKU TUN AMINAH

CHAPTER 1

INTRODUCTION

1.1 Background

Power system load component is a variety of equipment transforming electrical energy into other forms of energy (Benson and Wohlgemuth, 1963). The characteristic of load which active and reactive power are varying with the system frequency and voltage respectively have been attracted attentions. The study of load model justification in dynamical analysis of power system seems to demand more interest (Karisson and Hill, 1994).

Dynamic load characteristics changes with the changing of load composition with the time of day and week, seasons and weather. The dynamic load effect will bring significant impact to the power system in term of frequency.

Since the rapid growth of science and technology, many of the devices that are connected to the system work best at nominal frequency. In the most common case after a disturbance, a non–nominal frequency in the system results in a lower quality of the delivered electrical energy. Furthermore, too low frequencies (lower than $\approx 47 - 48$ Hz) lead to damaging vibrations in steam turbines, which in the worst case have to be disconnected. Thus, the spontaneous load variations in an electric power system require some form of frequency control must be used in most systems (Andersson, 2009).

PTTA UTHM PERPUSTAKAAN TUNKU TUN AMINAH

In order to reduce these risks, power system studies have to be developed with better models for system components including better load models (Mota, 2004). Dynamic load modeling had been used as an indicator to the power system stability and more important is, it will leads to reducing the risk by improving quality.

1.2 Problem statement

With the variation of load especially induction motor and power electronic control circuits which is frequency dependent, it can lead the changing the frequency of power supply. Simulation of dynamic load effect will be modeled.

1.3 Objectives

(a) To model a dynamic load model using dynamic load devices.
(b) To simulate the varying parameters which effect power system frequency.
(c) To observe the changes in power supply frequency caused by varying dynamic load.

1.4 Scope of Study

1 Simulate the dynamic load using component-based model especially affected power system frequency.
2 For simulation, matlab will be used.
3 Selection of dynamic load.

PTTA UTHM PERPUSTAKAAN TUNKU TUN AMINAH

1.5 Expected result

Modeled frequency dependent dynamic load will be able to show the changes in power system frequency. Component based model will represent its effect on frequency changing. These different values will help to detect the procedures and methods in power system stability, quality and reliability.

PTTA UTHM
PERPUSTAKAAN TUNKU TUN AMINAH

CHAPTER 2

LITERATURE REVIEW

2.1 Introduction

Rapid dynamic load variations effect the power system. The dynamic load effect will bring significant impact to the power system in term of frequency. Dynamic load modeling is widely used as a model to analyse power system reliability problem. The parameters which affect the power system frequency are to be determined. However, the accurate modelling of load continues to be a difficult task (Price *et al*., 1992) due to several factors, including:

- Large number of diverse load components
- Ownership and location of load devices in customer facilities not directly accessible to the electric utility
- Changing load composition with time of day and week, season, weather, and through time
- Lack of precise information on the composition of the load
- Uncertainties regarding the characteristic of many load components, particularly for large variation in frequency

PTTA UTHM PERPUSTAKAAN TUNKU TUN AMINAH

- Development of the new load technology

2.2 Stability of Power System

Power system stability is the ability of an electric power system, for a given initial operating condition, to recover a state of operating equilibrium after being subjected to a physical disturbance, with most system variables bounded so that practically the entire system remains intact (Sigrist *et al.*, 2010).

Analysis of stability, including identifying key factors that contribute to instability and devising methods of improving stable operation, is greatly facilitated by classification of stability into appropriate categories.

Power system stability can be categorized to rotor angle, frequency and voltage stabilities. As happened in Pacific Northwest, its power system exhibit a random variation overlaying a background oscillatory characteristics with an occasional tendency for oscillations to build up to appreciable magnitudes (Benson and Wohlgemuth, 1963). These oscillatory buildups, or period of frequency instability, were familiar occurrences which usually lasted only a minute or two, where they lasted for an appreciable period of time. Since this study is related with dynamic load effects on power system frequency therefore, more concentration will be made in this context.

2.3 Basic Load Concept in Term of Frequency Dependent Model

Accurate load models allow for more precise calculations of power system control and stability limits, which have long been recognized to be important in power system planning and operation. Because power system loads are consisting of

PTTA UTHM PERPUSTAKAAN TUNKU TUN AMINAH

many different devices, in control and stability studies, load models must represent their composite behaviors. An overall load model should represent the intrinsic load characteristics (Mauricio and Semlyen, 1971).

The term 'Load' can have several meanings in power system engineering, including:

- A device, connected to a power system that consumes power
- The total power (active and / or reactive) consumed by all devices connected to a power system
- A portion of the system that is not explicitly represented in a system model, but rather is treated as if it were a single power consuming device connected to a bus in a system model

Below are some explanations about the term of load:

Load component – A load component is the aggregate equivalent of all devices of a specific or similar type e.g., TV, room air conditioner, fluorescent lighting.

Load class – A load class is a category of load, such as, residential, commercial or industrial. For load modeling purposes, it is useful to group loads into several classes, where each class has similar load composition and load characteristic.

Load composition – The fractional composition of the load by load components. This term may be applied to a specific load class.

Load characteristic – A set of parameters, such as variation of active power (P) and frequency (f), etc., that characterise the behavior of a specified load. This term maybe applied to a specific load device, a load component or the load class.

PTTA UTHM PERPUSTAKAAN TUNKU TUN AMINAH

2.4 Frequency Variations

Frequency variation as shown in figure 2.1 is extremely rare in stable utility power systems, especially systems interconnected via a power grid (Zhang *et al.*, 2000).

Frequency variation is more common especially if the generator is heavily loaded. Existing equipment which is frequency tolerant does not affected by minor shifts in local generator frequency. However, there are some devices would be affected such as motor device or sensitive device that relies on steady regular cycling of power over time. Frequency variations may cause a motor to run faster or slower to match the frequency of the input power. This would cause the motor to run inefficiently and/or lead to added heat and degradation of the motor through increased motor speed and/or additional current draw.

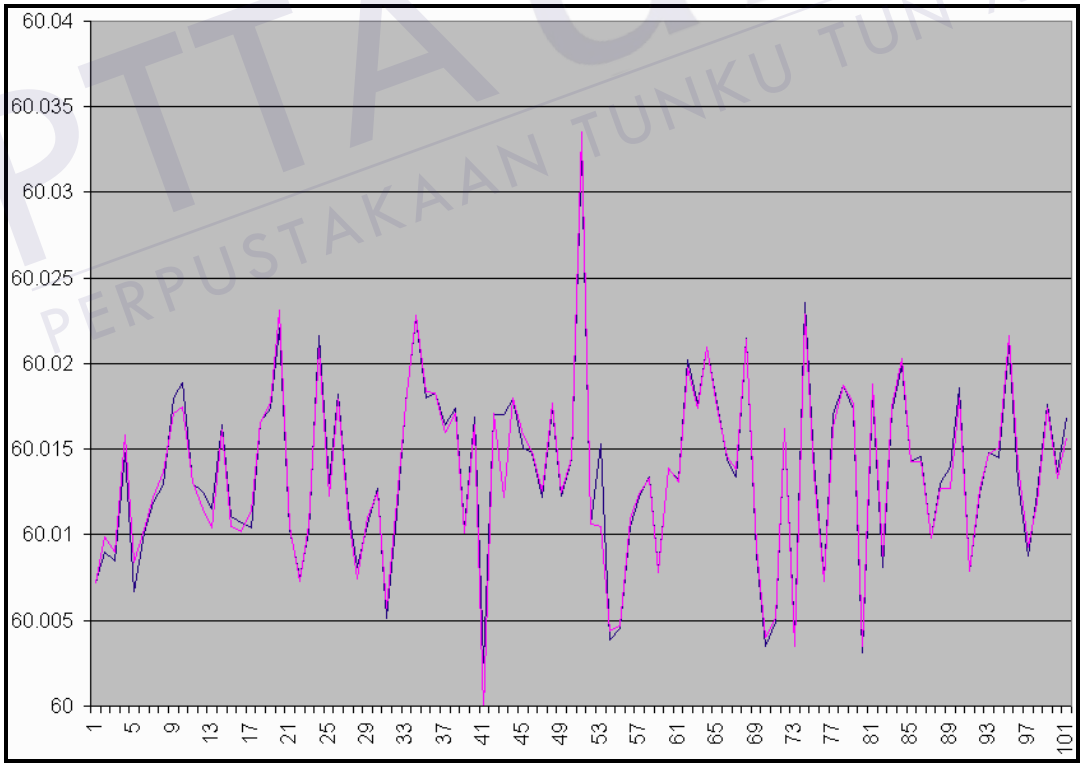

Figure 2.1: Frequency records Sept.9 2003

PTTA UTHM PERPUSTAKAAN TUNKU TUN AMINAH

2.5 Review Previous Case

Case I: Dynamic load scenario in power system

The frequency response performance of the Eastern Interconnection during the period of February 1 through February 5, 2011 was reviewed. Analysis showed that for large unit trips that occurred during that cold snap timeframe, frequency response in the interconnection was within the range of normal performance. Further, frequency was well within normal frequency bounds throughout the period. Therefore no further detailed analysis of frequency response for the Eastern Interconnection was warranted.

Figure 2.2 and figure 2.3 show the frequency for the Eastern Interconnection from February 1-5 with the largest generator trip annotated. For perspective, the 5-minute High and Low Frequency Trigger Limits (FTLs) for the Eastern Interconnection are shown.

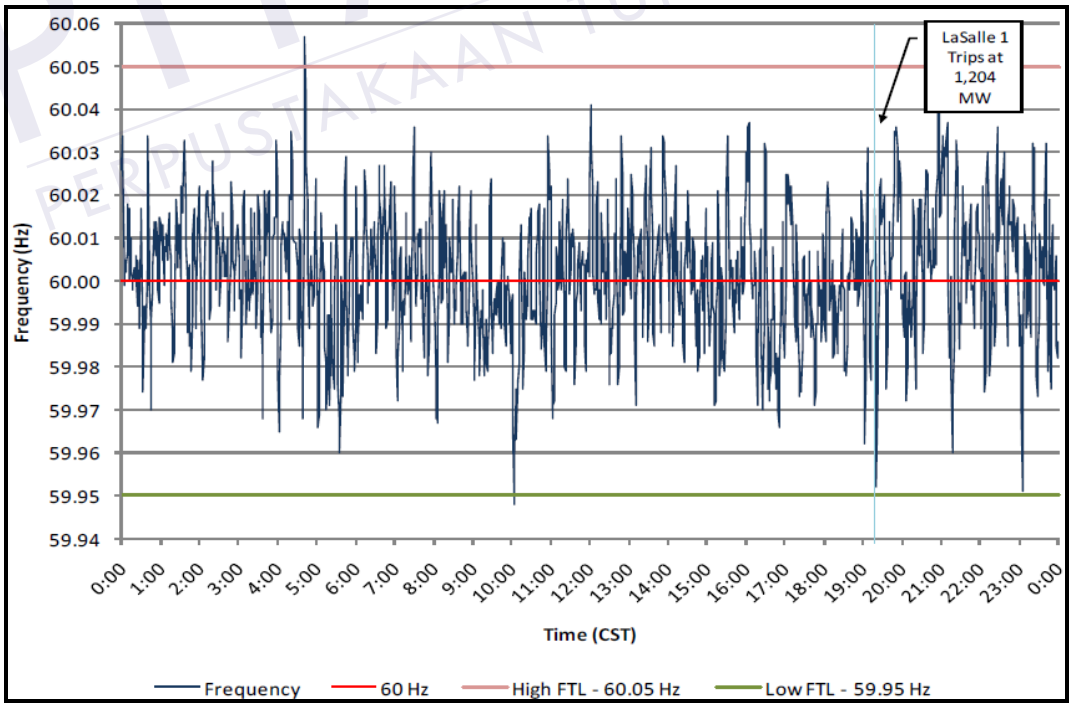

Figure 2.2: Eastern Interconnection Frequency (Feb 1, 2011)

PTTA UTHM PERPUSTAKAAN TUNKU TUN AMINAH

During that period, the largest generating unit trip recorded in the Eastern Interconnection was the loss of LaSalle Unit 1 at 19:18 CST while loaded to 1,204 MW. The frequency response of the interconnection for that event was calculated to be -2,406 MW/0.1 Hz.

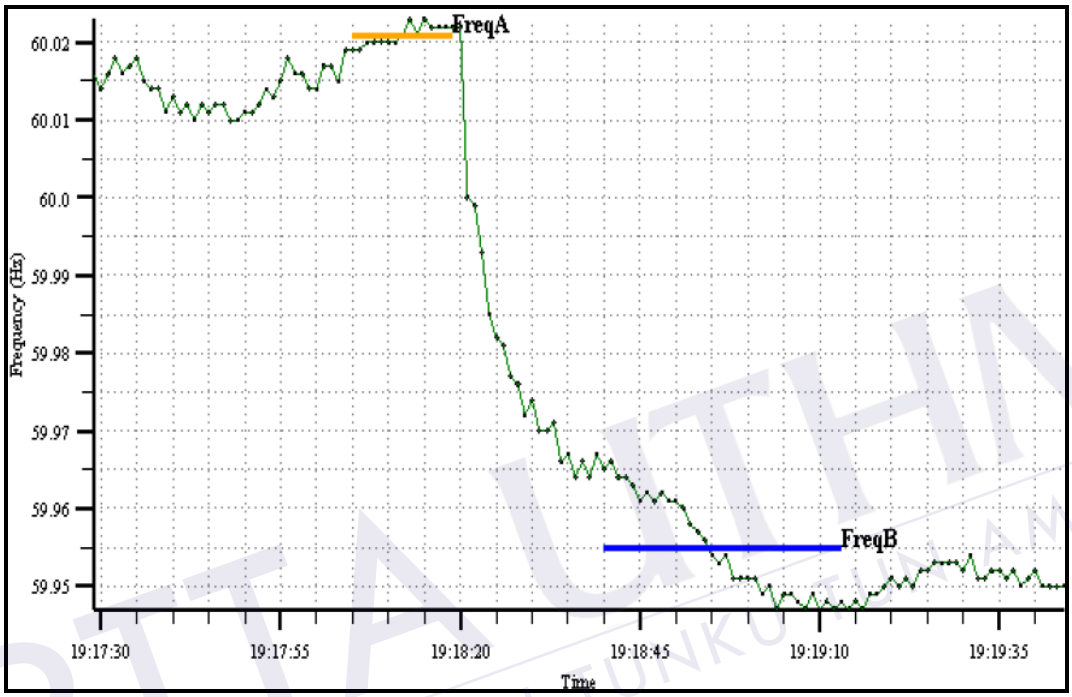

Figure 2.3: Eastern Interconnection Frequency Response during LaSalle Unit 1 Trip on (Feb 1, 2011)

PTTA UTHM PERPUSTAKAAN TUNKU TUN AMINAH

Case II: Frequency growth in Pacific Northwest

The Northwest interconnected system has had occasional periods of frequency instability. Prior to 1955 the incidence of these oscillatory periods was infrequent and consequently, they were of no serious concern. The gradually increasing incidence since 1955 became of considerable concern by 1959/1960, at which time periods of instability were noticeable practically every day. On some days, the situation was almost intolerable as shown in Figure 2.4.

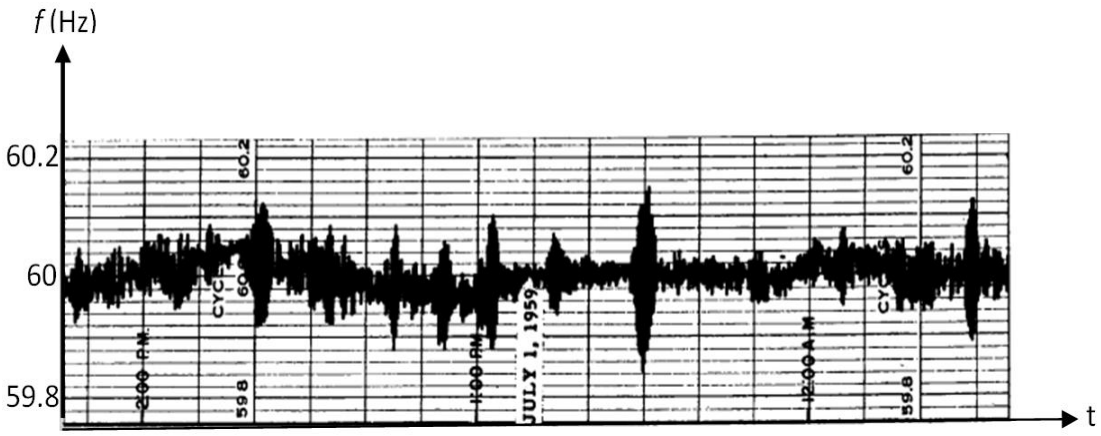

Figure 2.4: Rapid Frequency Instability.

The period 1955 through 1960 marked a continuing growth in size and complexity of the power system. The other factors which lead to this situation are when the load did not develop at the expected rate due to some economic expansion (Benson and Wohlgemuth, 1963).

PTTA UTHM
PERPUSTAKAAN TUNKU TUN AMINAH

Case III: 9 bus system

Figure 2.5 shows the one line diagram of an IEEE 9 bus test system (Anderson and Fouad, 1994). The model consists of three synchronous generators together with corresponding block transformers, six transmission lines and three loads.

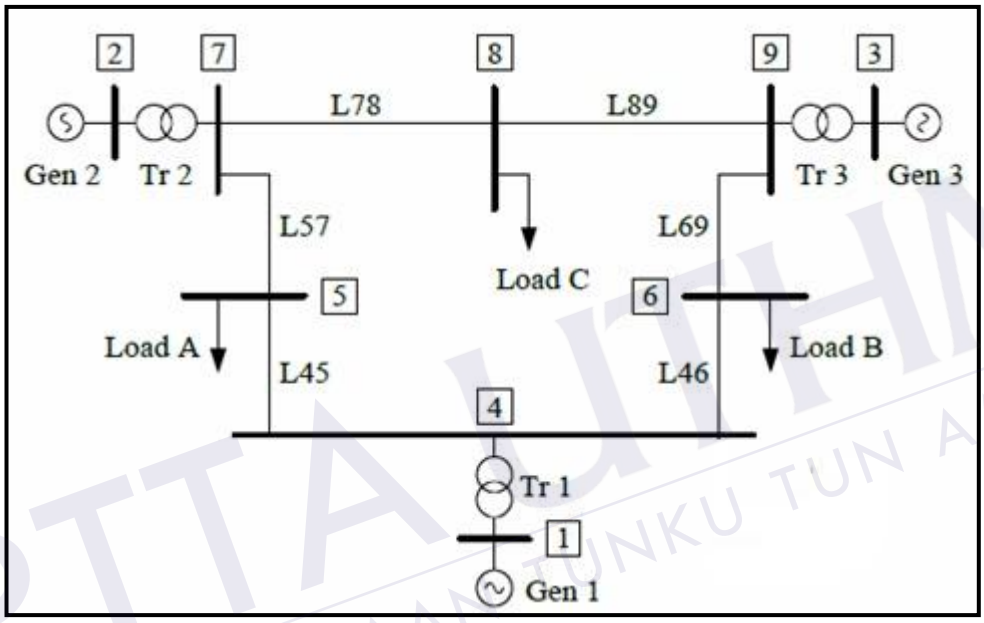

Figure 2.5: The model of the IEEE 9 bus test system

PTTA UTHM PERPUSTAKAAN TUNKU TUN AMINAH

Many different power conditions can be simulated simply by changing the production of three generating units and the consumption of three power system loads. In this paper, circumstances with a lack of active power were simulated, which causes a power system frequency to decay.

2.6 Load Modeling

Loads are either frequency-dependent or frequency-independent. In real power systems, a frequency dependency of the aggregated system load is clearly observable. This has a stabilizing effect on the system frequency *f*, as will be shown in the outcome. Apart from a component depending directly on *f*, large rotating motor loads cause an additional contribution depending on $\dot{f}$. This is due to the fact that kinetic energy can be stored in the rotating masses of the motors.

A load model that captures both effects is given by (Anderson, 2009);

$$P_{load}^{f} - P_{load}^{f_0} = \Delta P_{load}^{f} = K_l \Delta f + g(\Delta \dot{f}) \tag{2.1}$$

where

- P_{load}^{f} : Load power when f = f_0
- $K_l \Delta f$: Frequency dependency
- $g(\Delta \dot{f})$: Function that models the loads with rotating masses

The function $g(\Delta \dot{f})$ will now be derived. The rotating masses have the following kinetic energy:

$$W(f) = \frac{1}{2} J (2\pi f)^2 \tag{2.2}$$

The change in the kinetic energy, which is equal to the power P_M consumed by the motor is given by:

PTTA UTHM PERPUSTAKAAN TUNKU TUN AMINAH

$$P_M = \frac{dW}{dt} \tag{2.3}$$

and

$$\Delta P_M = \frac{d\Delta W}{dt} \tag{2.4}$$

ΔW can be approximated by:

$$W(f_0 + \Delta f) = 2\pi^2 J(f_0 + \Delta f)^2 \tag{2.5}$$

$$W_0 + \Delta W = 2\pi^2 J f_0^2 + 2\pi^2 J 2 f_0 \Delta f + 2\pi^2 J(\Delta f)^2 \tag{2.6}$$

$$= W_0 + \frac{2W_0}{f_0}\Delta f + \frac{W_0}{f_0^2}(\Delta f)^2 \tag{2.7}$$

$$\Rightarrow \Delta W \approx \frac{2W_0}{f_0}\Delta f \tag{2.8}$$

$$\Rightarrow \Delta P_M \approx \frac{2W_0}{f_0}\frac{d\Delta f}{dt} = \frac{2W_0}{f_0}\Delta \dot{f} \tag{2.9}$$

PTTA UTHM PERPUSTAKAAN TUNKU TUN AMINAH

REFERENCES

A. Larsson, “High frequency distortion in power grids due to electronic equipment”,Licentiate dissertation, Luleå University of Technology, kellefteå, Sweden, 2006.

Akhtar, M.Y. (1969). Comprehensive consideration of transient frequency deviation in power system transient stability studies. *PROC. IEEE, 166 (11),* 1920-1969.

Benson, A.R., and Wohlgemuth, D.G. (1963). System Frequency Stability in the Pacific Northwest. *System Frequency Stability,* 765-769.

D. Karlsson and D. J. Hill, “Modelling and identification of nonlinear dynamic loads in power systems,” IEEE Trans. Power Syst., vol. 9, no.1, pp. 157–166, Feb. 1994

G. Andersson: Modelling and Analysis of Electric Power Systems, ETH Zurich, 2009.

G. L. Skibinski, R. J. Kerkman and D. Schlegel, “EMI emissions of modern PWM AC rives,” IEEE Industry Applications Magazine, vol. 5, Issue: 6, pp. 47 - 80, 1999.

Karisson, D., and Hill, D.J. (1994). Modeling and Identification of Non-linear Dynamic Load in Power System. *IEEE Transaction on Power Systems, 9 (1),* 157-166.

Kim, B.H., Kim, H., and Lee, B. (20102). Parameter Estimation for the Composite Load Model. *Journal of International Council on Electrical Engineering, 2 (2),* 215-218.

PTTA UTHM PERPUSTAKAAN TUNKU TUN AMINAH

Klien, M., Rogers, G.J., and Kundur , P. (1991). A Fundamental Study of Inter-area Oscillations in Power Systems. *Transaction on Power Sysytems, 6 (3),* 914-921.

Liang, Y., Nwankpa C.O., Fischi, R., DeVito, A., and Readinger, S.C. (1998). Dynamic Reactive Load Model. *IEEE Transaction on Power Systems, 13 (4),* 1365-1372.

M. D. Illic, J. R. Lacalle-Melero, F. Nishimura, W. Schenler, "Short-term Economic Energy Management in a Competitive Utility Environment," IEEE transactions on Power Systems, vol. 8, no. 1, pp. 198-206, February 1993.

Mauricio, W., and Semlyen, A. (1971). Effect of Load Characteristics on the Dynamic Stability of Power Systems. *The IEEE Winter Meeting in New York*.

Mayer, F.J., and Lee, H.Y. (1982). Improved Dynamic Load Model for Power System Stability Studies. *IEEE Transaction on Power Systems, PAS-101 (9),* 3303-3309.

Milanovic, J.V., and Hiskens, I.A. (1995). Effect of dynamic load model parameters on damping of oscillations in power systems. *Electric power Systems Research, 33.* 53- 61.

Milanovic, J.V., and Hiskens, I.A. (1995). Effect of dynamics on power system damping. *IEEE Transaction on Power Systems, 10 (2),* 1022-1028.

Mota, L.T.M., and Mota, A.A. (2004). Load modeling at electric power distribution substations using dynamic load parameters estimation. *Electrical Power and Energy Systems, 26,* 805-811.

N.G.Hingorani,"Flexible AC transmission",CIGRE Regional Meeting,Paper No 7.1,Gold Coast Australia,4-8th October 1993.

PTTA UTHM PERPUSTAKAAN TUNKU TUN AMINAH

P. M. Anderson and A. A. Fouad,"Power System Control and Stability".New York: IEEE Press, 1994.

Price, W.W., Chiang, H.D., Clark, H.K., Concordia, C., Lee, D.C., Hsu, J.C., Ihara, S., King, C.A., Lin, C.J., Mansour, Y., Srinivasan, K., Taylor, C.W., and Vaahedi, E. (1992). Load Presentation for Dynamic Performance Analysis. *IEEE Transaction on Power Systems, 8 (2),* 472-482.

Sigrist, L., Egido, I., and Rouco, L. (2010) Frequency Stability Boundary of Small Isolated Power Systems. *IEEE 26-th Convention of Electrical and Electronics Engineers in Israel.*

Tao L, Alexander D, 2006, "Real time Measurement of Power Disturbances: Part 1. Survey and a Novel Complex Filter Approach". Electric Power Systems Research. Vol. 76.)

Vellano N, Soletto K, 2007, "PLC Systems Performance Analysis Regarding Power Quality Disturbances". IEEE International Symposium. Vol. 10.

Wang, J.C., Chiang, H.D., Chang, C.L., Liu, A.H., Huang, C.H., and Huang, C.Y. (1994) Development of a Frequency-dependent Composite Load Model using the measurement Approach. *IEEE Transaction on Power Systems, 9 (3),* 1546-1556.

Zhao, B., Tang, Y., Zhang, W., and Wang, Q. (2010). Modeling of Common Load Components in Power System Based on Dynamic Simulation Experiment. *International Conference on Power System Technology*.

Zhang, Q; So, P.L., "Dynamic modelling of a combined cycle plant for power system stability studies", Proceedings of IEEE Power Engineering Society Winter Meeting, 2000, pp. 1538-1543.

PTTA UTHM PERPUSTAKAAN TUNKU TUN AMINAH